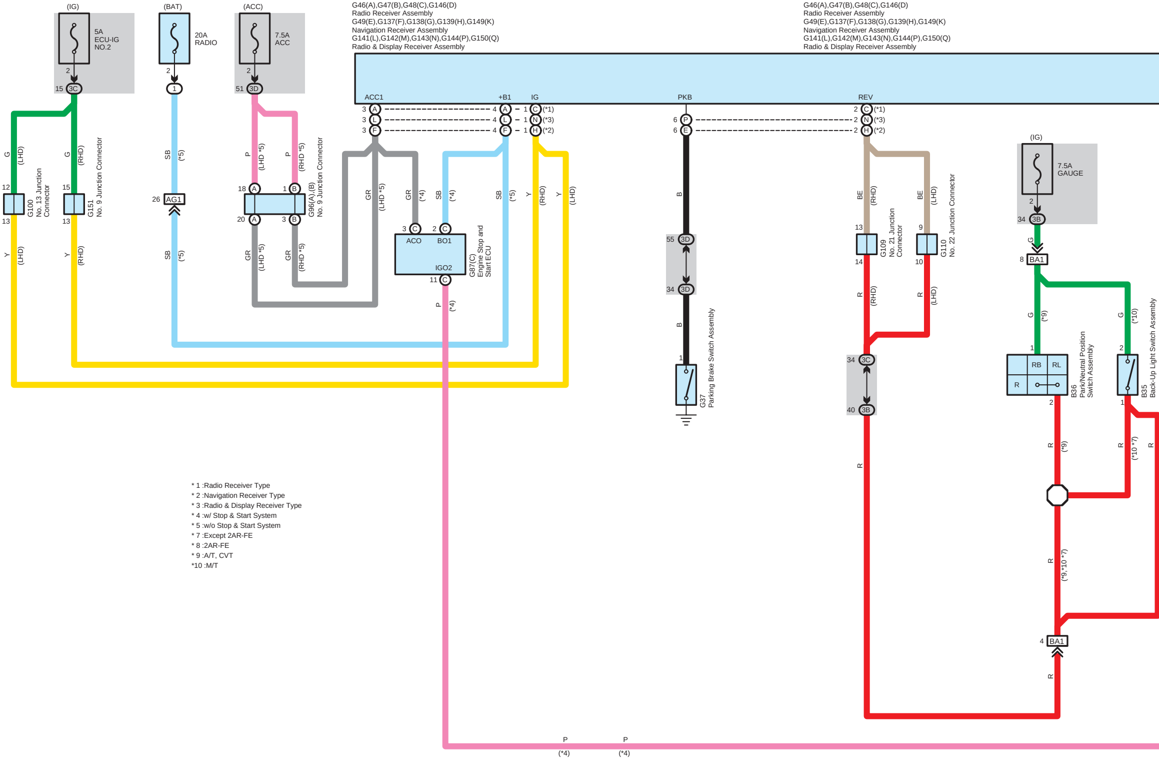
(IG)
5A
ECU-IG
NO.2
(BAT)
20A
RADIO
(ACC)
7.5A
ACC
G46(A),G47(B),G48(C),G146(D)
Radio Receiver Assembly
G49(E),G137(F),G138(G),G139(H),G149(K)
Navigation Receiver Assembly
G141(L),G142(M),G143(N),G144(P),G150(Q)
Radio & Display Receiver Assembly
ACC1
+B1
IG
PKB
REV
15 3C
1
51 3D
G100
No. 13 Junction
Connector
G151
No. 9 Junction Connector
26 AG1
G96(A),(B)
No. 9 Junction Connector
G87(C)
Engine Stop and
Start ECU
ACO
BO1
IGO2
55 3D
34 3D
G37
Parking Brake Switch Assembly
G109
No. 21 Junction
Connector
G110
No. 22 Junction Connector
34 3C
40 3B
(IG)
7.5A
GAUGE
34 3B
8 BA1
B36
Park/Neutral Position
Switch Assembly
RB
RL
R
B35
Back-Up Light Switch Assembly
4 BA1
G
Y
SB
P
GR
B
BE
R
(LHD)
(RHD)
(*5)
(LHD *5)
(RHD *5)
(*4)
(*1)
(*2)
(*3)
(*9)
(*10)
(*10 *7)
(*9, *10 *7)

* 1 :Radio Receiver Type
* 2 :Navigation Receiver Type
* 3 :Radio & Display Receiver Type
* 4 :w/ Stop & Start System
* 5 :w/o Stop & Start System
* 7 :Except 2AR-FE
* 8 :2AR-FE
* 9 :A/T, CVT
*10 :M/T

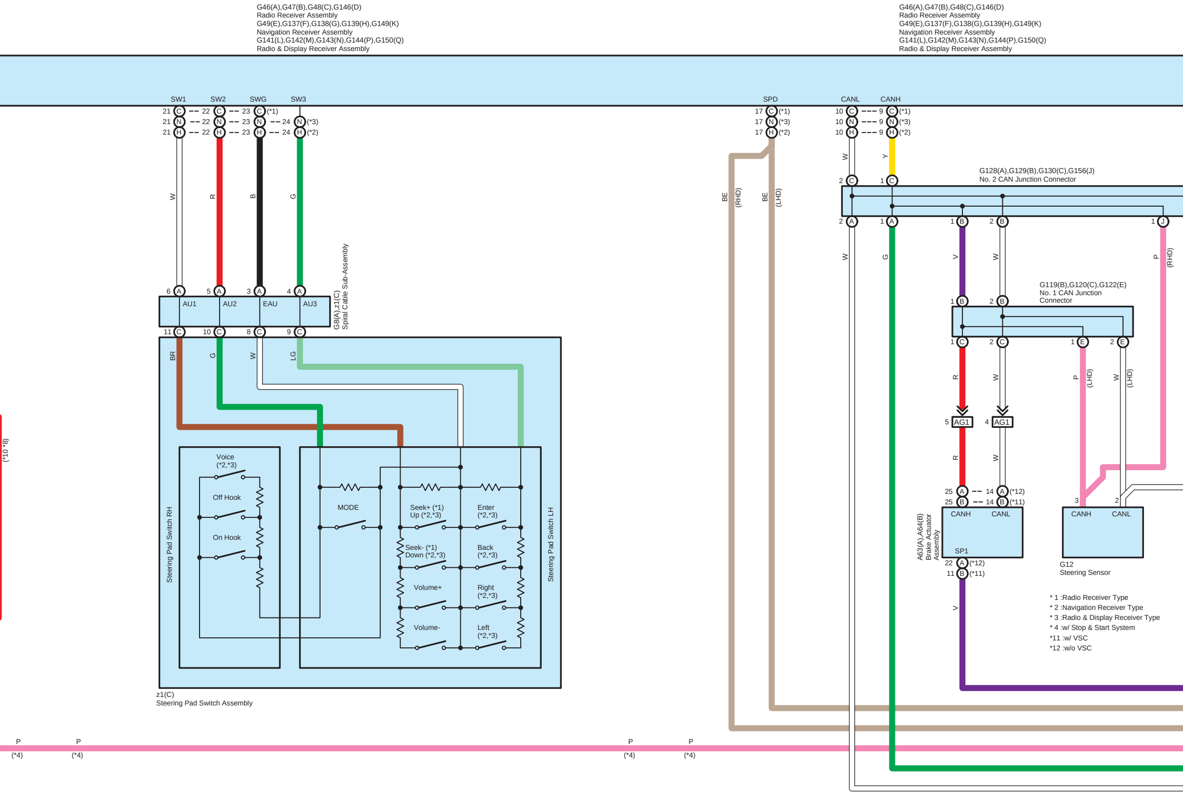
G46(A),G47(B),G48(C),G146(D)
Radio Receiver Assembly
G49(E),G137(F),G138(G),G139(H),G149(K)
Navigation Receiver Assembly
G141(L),G142(M),G143(N),G144(P),G150(Q)
Radio & Display Receiver Assembly
G46(A),G47(B),G48(C),G146(D)
Radio Receiver Assembly
G49(E),G137(F),G138(G),G139(H),G149(K)
Navigation Receiver Assembly
G141(L),G142(M),G143(N),G144(P),G150(Q)
Radio & Display Receiver Assembly
SW1
SW2
SWG
SW3
21 C 22 C 23 C (*1)
21 N 22 N 23 N 24 N (*3)
21 H 22 H 23 H 24 H (*2)
SPD
17 C (*1)
17 N (*3)
17 H (*2)
CANL
CANH
10 C 9 C (*1)
10 N 9 N (*3)
10 H 9 H (*2)
W
R
B
G
BE
(RHD)
BE
(LHD)
W
Y
2 C
1 C
G128(A),G129(B),G130(C),G156(J)
No. 2 CAN Junction Connector
2 A
1 A
1 B
2 B
1 J
W
G
V
W
P
(RHD)
6 A
5 A
3 A
4 A
AU1
AU2
EAU
AU3
G8(A),z1(C)
Spiral Cable Sub-Assembly
11 C
10 C
8 C
9 C
BR
G
W
LG
G119(B),G120(C),G122(E)
No. 1 CAN Junction
Connector
1 B
2 B
1 C
2 C
1 E
2 E
R
W
P
(LHD)
W
(LHD)
5 AG1
4 AG1
R
W
25 A 14 A (*12)
25 B 14 B (*11)
3
2
CANH
CANL
CANH
CANL
SP1
A63(A),A64(B)
Brake Actuator
Assembly
22 A (*12)
11 B (*11)
G12
Steering Sensor
V
Voice
(*2,*3)
Off Hook
On Hook
MODE
Seek+ (*1)
Up (*2,*3)
Enter
(*2,*3)
Seek- (*1)
Down (*2,*3)
Back
(*2,*3)
Volume+
Right
(*2,*3)
Volume-
Left
(*2,*3)
Steering Pad Switch RH
Steering Pad Switch LH
z1(C)
Steering Pad Switch Assembly
(*10 *8)
P
(*4)
P
(*4)
P
(*4)
P
(*4)

* 1 :Radio Receiver Type
* 2 :Navigation Receiver Type
* 3 :Radio & Display Receiver Type
* 4 :w/ Stop & Start System
*11 :w/ VSC
*12 :w/o VSC

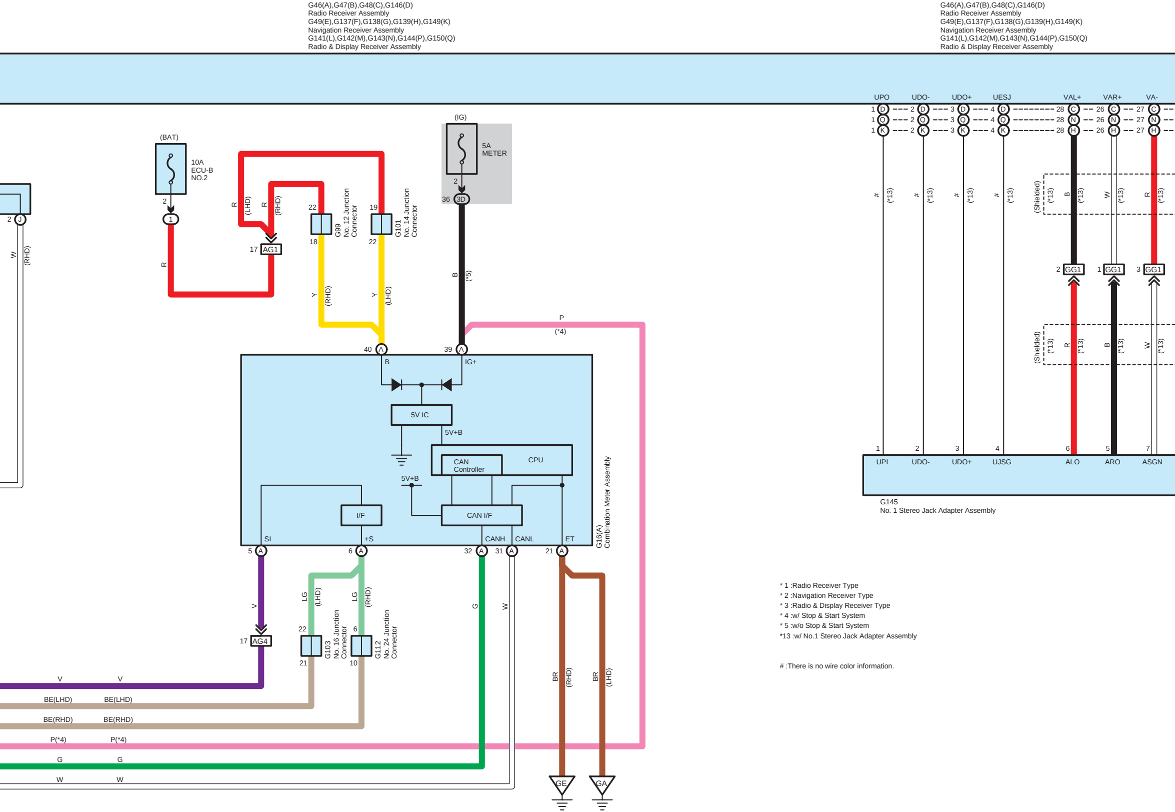
G46(A),G47(B),G48(C),G146(D)
Radio Receiver Assembly
G49(E),G137(F),G138(G),G139(H),G149(K)
Navigation Receiver Assembly
G141(L),G142(M),G143(N),G144(P),G150(Q)
Radio & Display Receiver Assembly
G46(A),G47(B),G48(C),G146(D)
Radio Receiver Assembly
G49(E),G137(F),G138(G),G139(H),G149(K)
Navigation Receiver Assembly
G141(L),G142(M),G143(N),G144(P),G150(Q)
Radio & Display Receiver Assembly
UPO
UDO-
UDO+
UESJ
VAL+
VAR+
VA-
(BAT)
10A
ECU-B
NO.2
(IG)
5A
METER
2 J
W
(RHD)
2
1
R
R
(LHD)
R
(RHD)
17 AG1
22
18
G99
No. 12 Junction
Connector
19
22
G101
No. 14 Junction
Connector
Y
(RHD)
Y
(LHD)
2
36 3D
B
(*5)
P
(*4)
40 A
39 A
B
IG+
5V IC
5V+B
CAN
Controller
CPU
5V+B
I/F
CAN I/F
SI
+S
CANH
CANL
ET
G16(A)
Combination Meter Assembly
5 A
6 A
32 A
31 A
21 A
V
17 AG4
LG
(LHD)
LG
(RHD)
22
21
G103
No. 16 Junction
Connector
6
10
G112
No. 24 Junction
Connector
G
W
BR
(RHD)
BR
(LHD)
GE
GA
V
V
BE(LHD)
BE(LHD)
BE(RHD)
BE(RHD)
P(*4)
P(*4)
G
G
W
W
#
(*13)
(Shielded)
(*13)
B
W
R
2 GG1
1 GG1
3 GG1
(Shielded)
(*13)
R
B
W
1
2
3
4
6
5
7
UPI
UDO-
UDO+
UJSG
ALO
ARO
ASGN
G145
No. 1 Stereo Jack Adapter Assembly

* 1 :Radio Receiver Type
* 2 :Navigation Receiver Type
* 3 :Radio & Display Receiver Type
* 4 :w/ Stop & Start System
* 5 :w/o Stop & Start System
*13 :w/ No.1 Stereo Jack Adapter Assembly

:There is no wire color information.

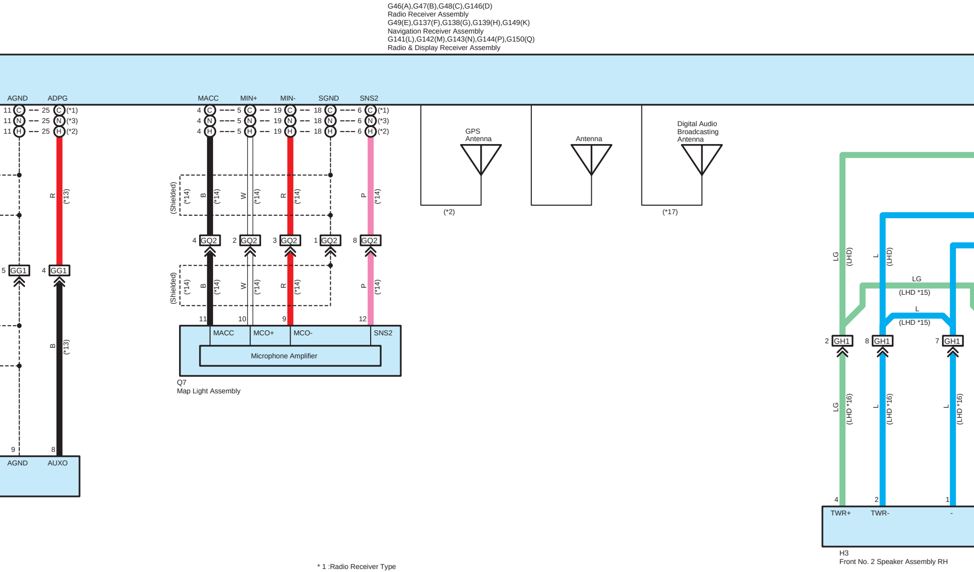
G46(A),G47(B),G48(C),G146(D)
Radio Receiver Assembly
G49(E),G137(F),G138(G),G139(H),G149(K)
Navigation Receiver Assembly
G141(L),G142(M),G143(N),G144(P),G150(Q)
Radio & Display Receiver Assembly
AGND
ADPG
MACC
MIN+
MIN-
SGND
SNS2
11 C 25 C (*1)
11 N 25 N (*3)
11 H 25 H (*2)
4 C 5 C 19 C 18 C 6 C (*1)
4 N 5 N 19 N 18 N 6 N (*3)
4 H 5 H 19 H 18 H 6 H (*2)
R (*13)
(Shielded) (*14)
B (*14)
W (*14)
R (*14)
P (*14)
5 GG1
4 GG1
4 GO2
2 GO2
3 GO2
1 GO2
8 GO2
B (*13)
9
8
AGND
AUXO
11
10
9
12
MACC
MCO+
MCO-
SNS2
Microphone Amplifier
Q7
Map Light Assembly
GPS Antenna
(*2)
Antenna
Digital Audio Broadcasting Antenna
(*17)
LG (LHD)
L (LHD)
LG (LHD *15)
L (LHD *15)
2 GH1
8 GH1
7 GH1
LG (LHD *16)
L (LHD *16)
L (LHD *16)
4
2
1
TWR+
TWR-
-
H3
Front No. 2 Speaker Assembly RH

* 1 :Radio Receiver Type
* 2 :Navigation Receiver Type
* 3 :Radio & Display Receiver Type
*14 :w/ Microphone Amplifier
*15 :4 Speaker
*16 :6 Speaker
*17 :w/ Digital Audio Broadcasting Antenna

G46(A),G47(B),G48(C),G146(D)
Radio Receiver Assembly
G49(E),G137(F),G138(G),G139(H),G149(K)
Navigation Receiver Assembly
G141(L),G142(M),G143(N),G144(P),G150(Q)
Radio & Display Receiver Assembly

G46(A),G47(B),G48(C),G146(D)
Radio Receiver Assembly
G49(E),G137(F),G138(G),G139(H),G149(K)
Navigation Receiver Assembly
G141(L),G142(M),G143(N),G144(P),G150(Q)
Radio & Display Receiver Assembly

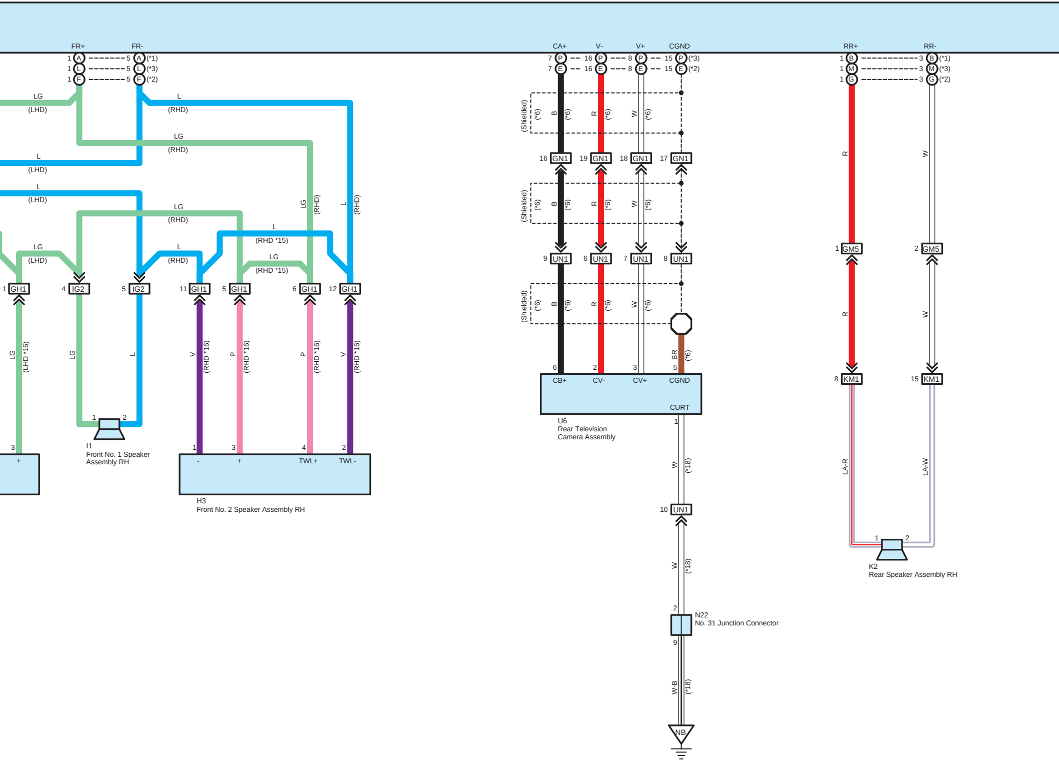
FR+
FR-
1 A 5 A (*1)
1 L 5 L (*3)
1 F 5 F (*2)
LG (LHD)
L (RHD)
LG (RHD)
L (LHD)
L (LHD)
LG (RHD)
LG (LHD)
L (RHD)
L (RHD *15)
LG (RHD *15)
LG (RHD)
L (RHD)
1 GH1
4 IG2
5 IG2
11 GH1
5 GH1
6 GH1
12 GH1
LG (LHD *16)
LG
L
V (RHD *16)
P (RHD *16)
P (RHD *16)
V (RHD *16)
3 +
1 2
I1
Front No. 1 Speaker Assembly RH
1 - 3 + 4 TWL+ 2 TWL-
H3
Front No. 2 Speaker Assembly RH
CA+
V-
V+
CGND
7 P 16 P 8 P 15 P (*3)
7 E 16 E 8 E 15 E (*2)
(Shielded) (*6)
B (*6)
R (*6)
W (*6)
16 GN1
19 GN1
18 GN1
17 GN1
9 UN1
6 UN1
7 UN1
8 UN1
BR (*6)
6 CB+
2 CV-
3 CV+
5 CGND
CURT
U6
Rear Television Camera Assembly
1
W (*18)
10 UN1
2
N22
No. 31 Junction Connector
9
W-B (*18)
NB
RR+
RR-
1 B 3 B (*1)
1 M 3 M (*3)
1 G 3 G (*2)
R
W
1 GM5
2 GM5
8 KM1
15 KM1
LA-R
LA-W
1 2
K2
Rear Speaker Assembly RH

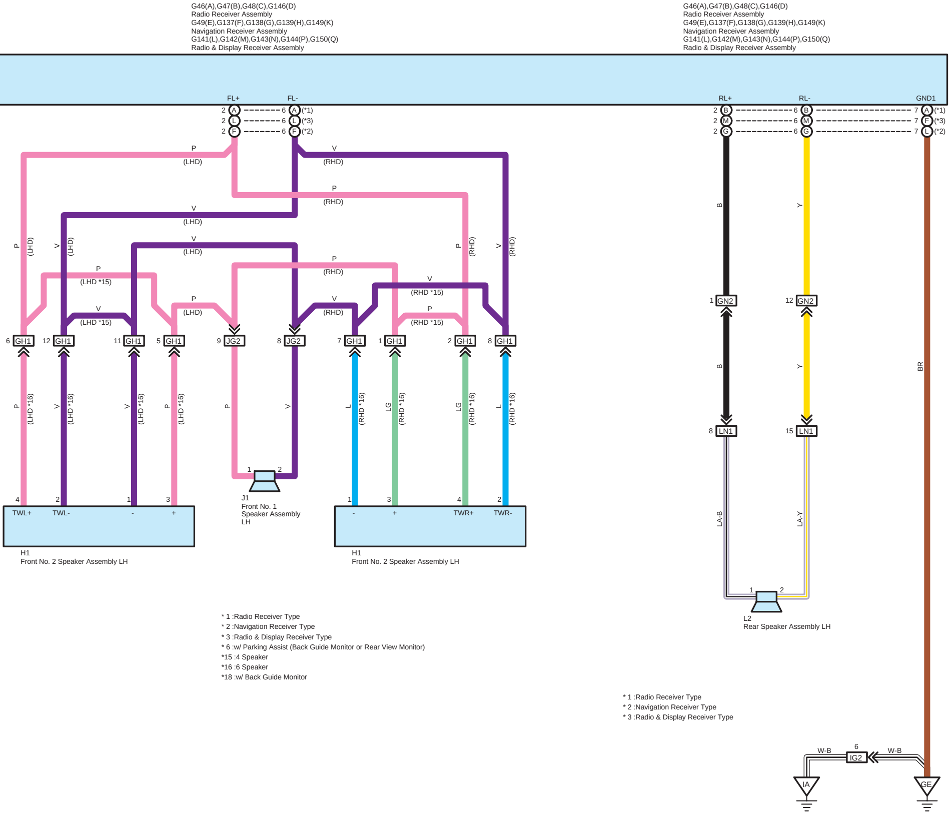
G46(A),G47(B),G48(C),G146(D)
Radio Receiver Assembly
G49(E),G137(F),G138(G),G139(H),G149(K)
Navigation Receiver Assembly
G141(L),G142(M),G143(N),G144(P),G150(Q)
Radio & Display Receiver Assembly
FL+
FL-
2 A
2 L
2 F
6 A (*1)
6 L (*3)
6 F (*2)
P (LHD)
V (RHD)
P (RHD)
V (LHD)
V (LHD)
P (LHD *15)
P (RHD)
V (RHD *15)
V (LHD *15)
P (LHD)
V (RHD)
P (RHD *15)
6 GH1
12 GH1
11 GH1
5 GH1
9 JG2
8 JG2
7 GH1
1 GH1
2 GH1
8 GH1
P (LHD *16)
V (LHD *16)
L (RHD *16)
LG (RHD *16)
J1
Front No. 1 Speaker Assembly LH
H1
Front No. 2 Speaker Assembly LH
TWL+
TWL-
-
+
TWR+
TWR-
G46(A),G47(B),G48(C),G146(D)
Radio Receiver Assembly
G49(E),G137(F),G138(G),G139(H),G149(K)
Navigation Receiver Assembly
G141(L),G142(M),G143(N),G144(P),G150(Q)
Radio & Display Receiver Assembly
RL+
RL-
GND1
2 B
2 M
2 G
6 B
6 M
6 G
7 A (*1)
7 F (*3)
7 L (*2)
B
Y
BR
1 GN2
12 GN2
8 LN1
15 LN1
LA-B
LA-Y
L2
Rear Speaker Assembly LH
W-B
6 IG2
IA
GE

* 1 :Radio Receiver Type
* 2 :Navigation Receiver Type
* 3 :Radio & Display Receiver Type
* 6 :w/ Parking Assist (Back Guide Monitor or Rear View Monitor)
*15 :4 Speaker
*16 :6 Speaker
*18 :w/ Back Guide Monitor

* 1 :Radio Receiver Type
* 2 :Navigation Receiver Type
* 3 :Radio & Display Receiver Type